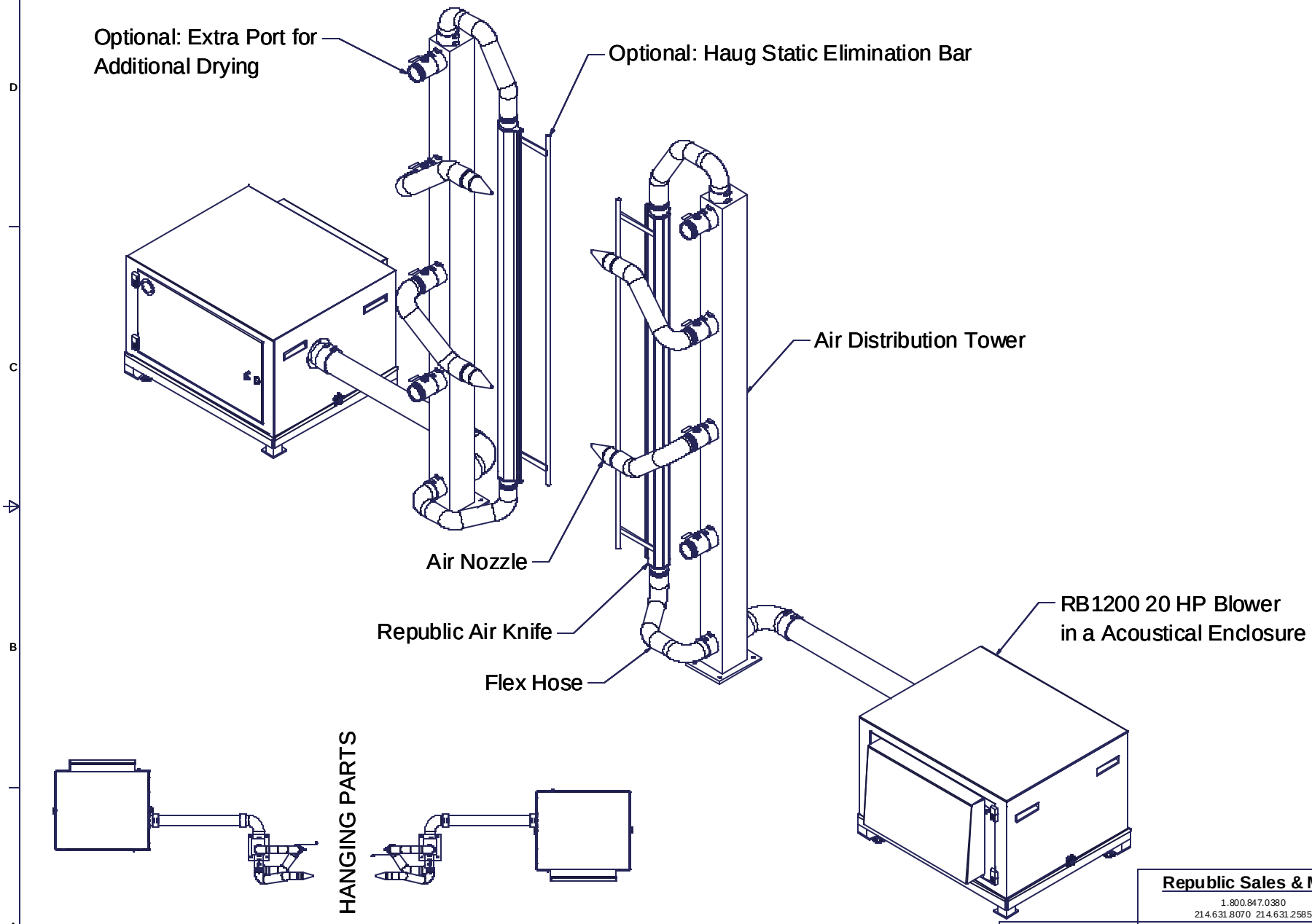

Republic Sales & Mfg.

1.800.847.0380
214.631.8070 214.631.2585

DRAWING CONFIGURATION IS **CONCEPTUAL ONLY**. DIMENSIONS ARE APPROXIMATE. **DO NOT SCALE**

TITLE: Hanging Part Drying System

DWG NO: HangPartDrying