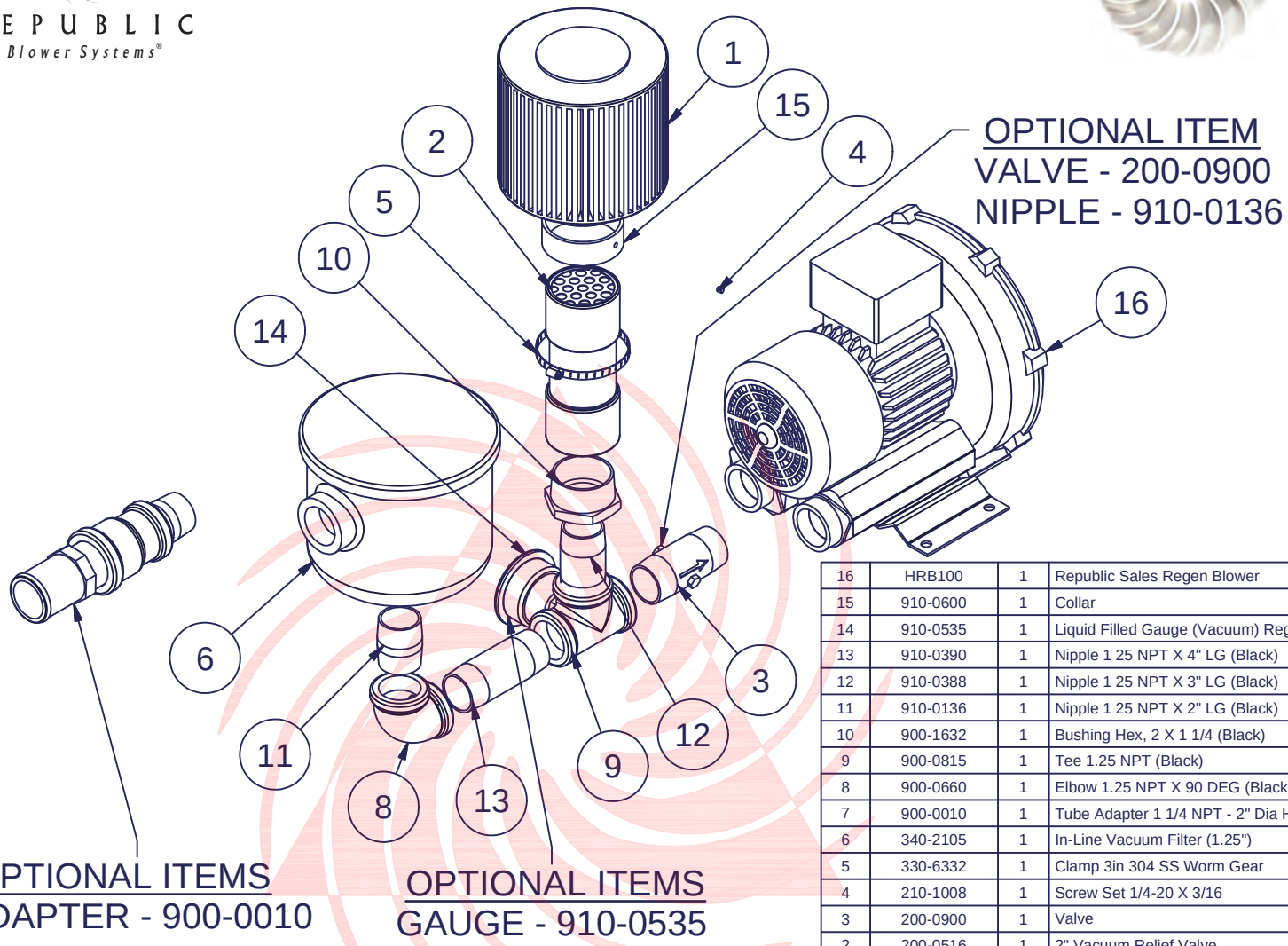

ITEM	PART NUMBER	QTY	DESCRIPTION
16	HRB100	1	Republic Sales Regen Blower
15	910-0600	1	Collar
14	910-0535	1	Liquid Filled Gauge (Vacuum) Regens
13	910-0390	1	Nipple 1 25 NPT X 4" LG (Black)
12	910-0388	1	Nipple 1 25 NPT X 3" LG (Black)
11	910-0136	1	Nipple 1 25 NPT X 2" LG (Black)
10	900-1632	1	Bushing Hex, 2 X 1 1/4 (Black)
9	900-0815	1	Tee 1.25 NPT (Black)
8	900-0660	1	Elbow 1.25 NPT X 90 DEG (Black)
7	900-0010	1	Tube Adapter 1 1/4 NPT - 2" Dia Hose
6	340-2105	1	In-Line Vacuum Filter (1.25")
5	330-6332	1	Clamp 3in 304 SS Worm Gear
4	210-1008	1	Screw Set 1/4-20 X 3/16
3	200-0900	1	Valve
2	200-0516	1	2" Vacuum Relief Valve
1	C 17100	1	Inlet Air Filter

Bill of Materials

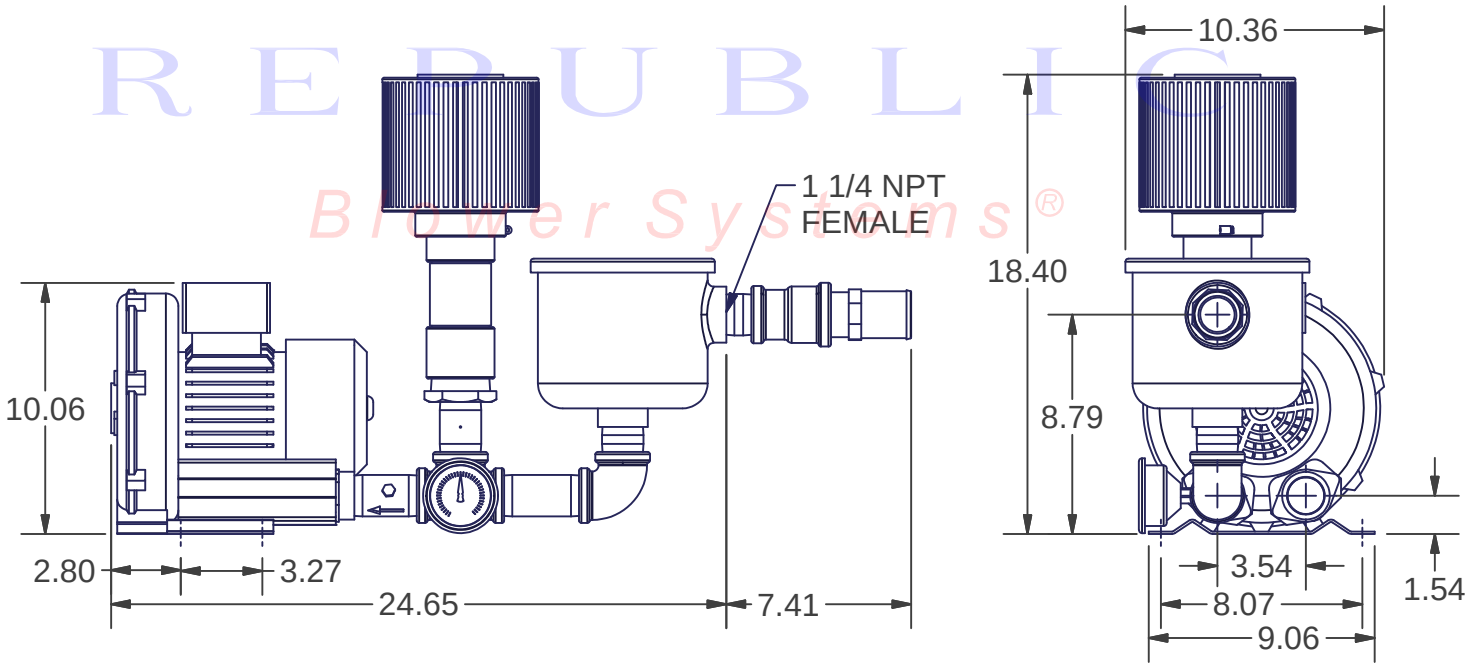

Approx Weight_____

Kit Vacuum Pump 1 1/4" Kit	KVHRB100