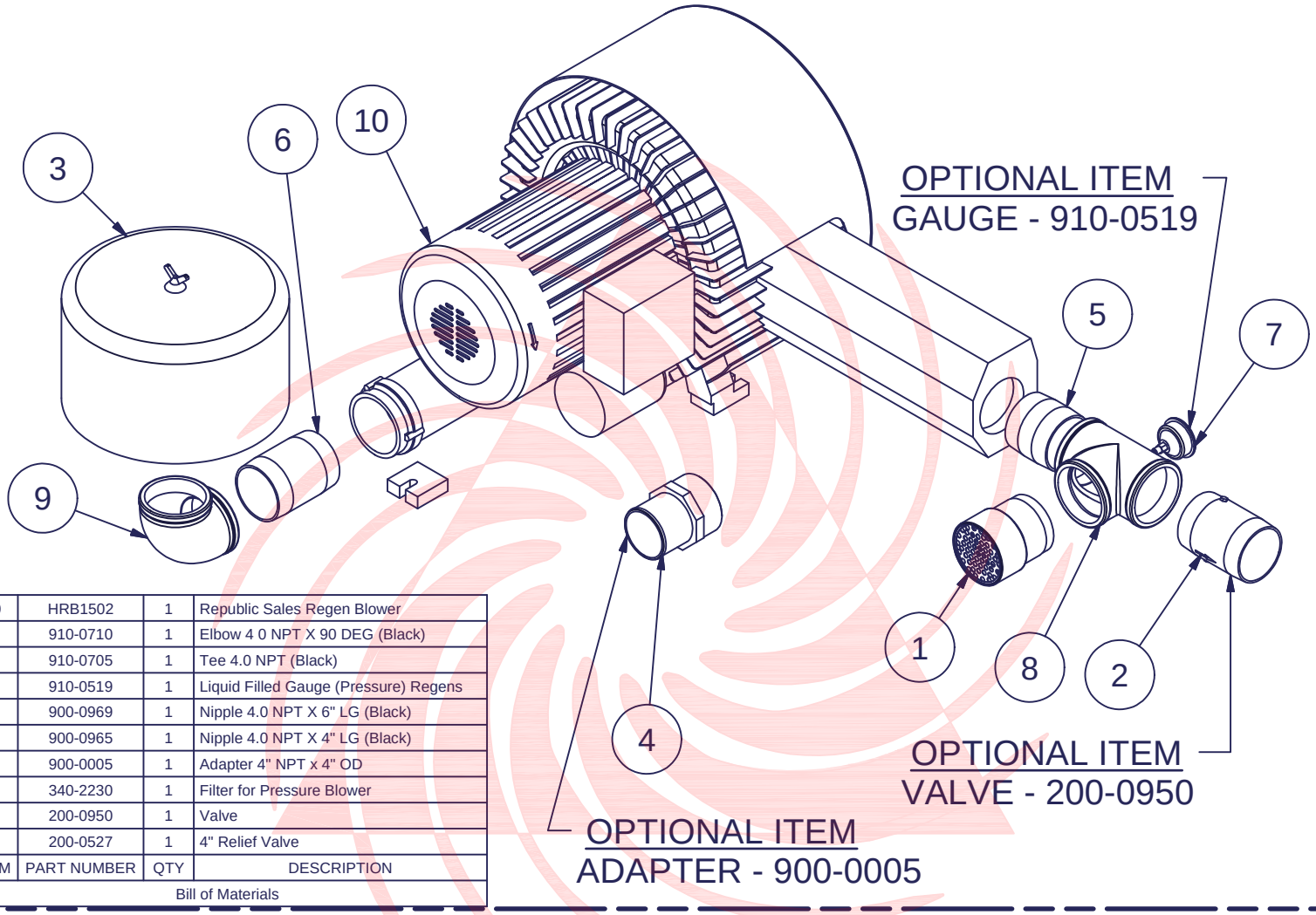

ITEM	PART NUMBER	QTY	DESCRIPTION
10	HRB1502	1	Republic Sales Regen Blower
9	910-0710	1	Elbow 4 0 NPT X 90 DEG (Black)
8	910-0705	1	Tee 4.0 NPT (Black)
7	910-0519	1	Liquid Filled Gauge (Pressure) Regens
6	900-0969	1	Nipple 4.0 NPT X 6" LG (Black)
5	900-0965	1	Nipple 4.0 NPT X 4" LG (Black)
4	900-0005	1	Adapter 4" NPT x 4" OD
3	340-2230	1	Filter for Pressure Blower
2	200-0950	1	Valve
1	200-0527	1	4" Relief Valve

Bill of Materials

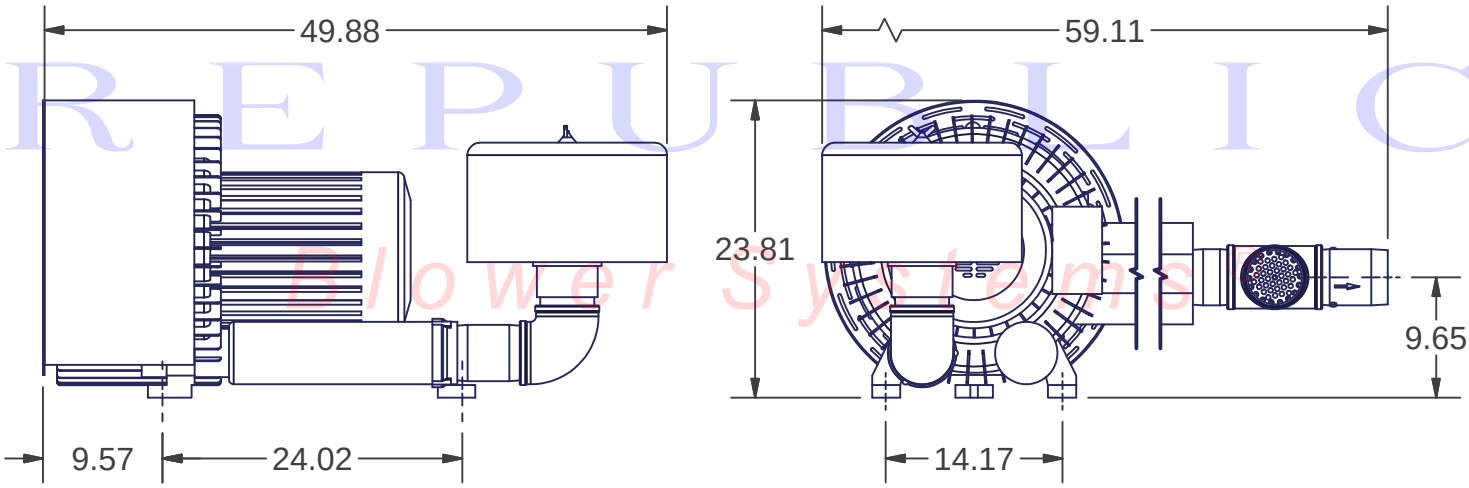

Approx Weight_____

Kit Pressure Pump 4" NPT	KPHRB1502