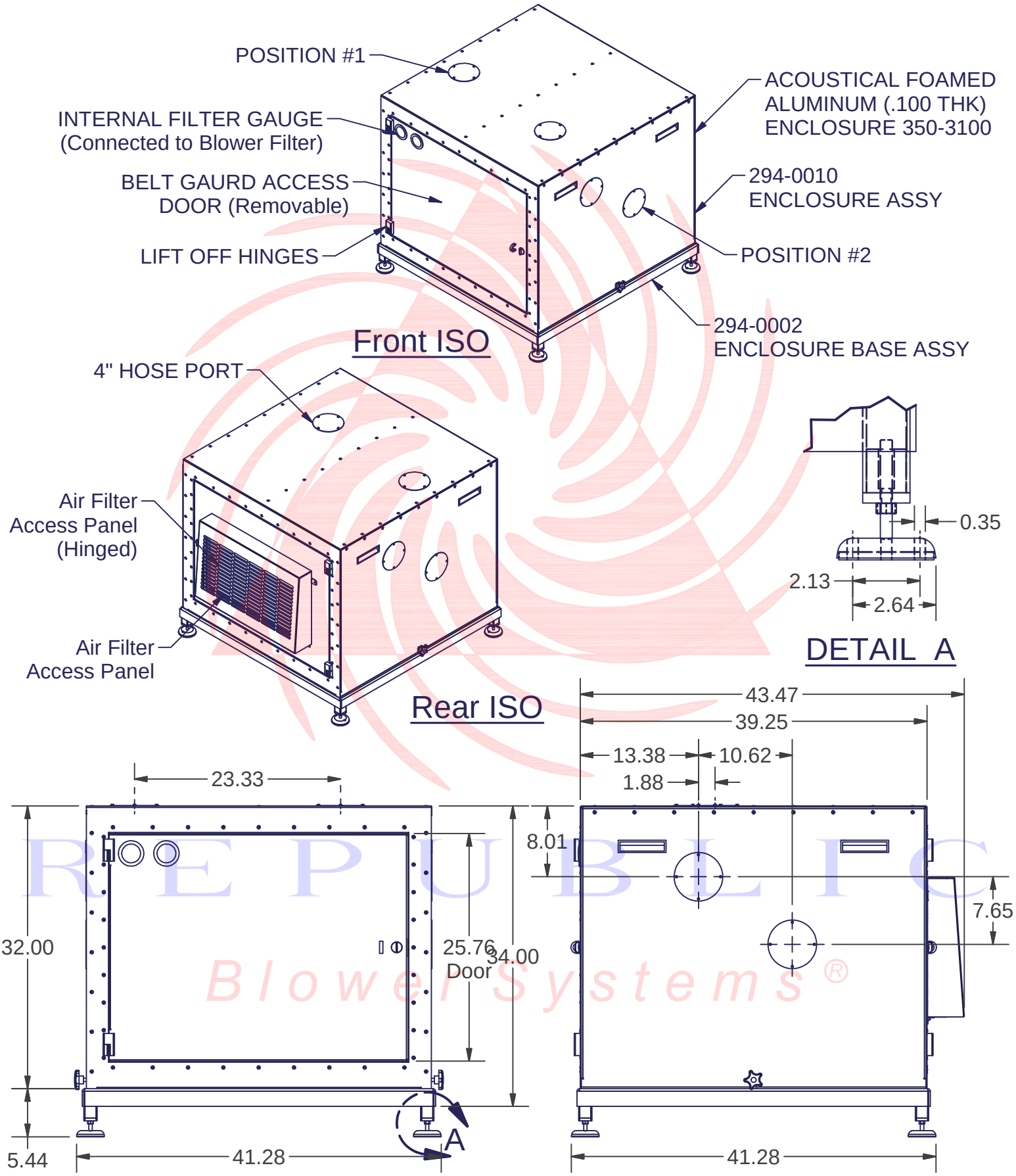

RB2400 Painted Enclosure Assembly	350-3100