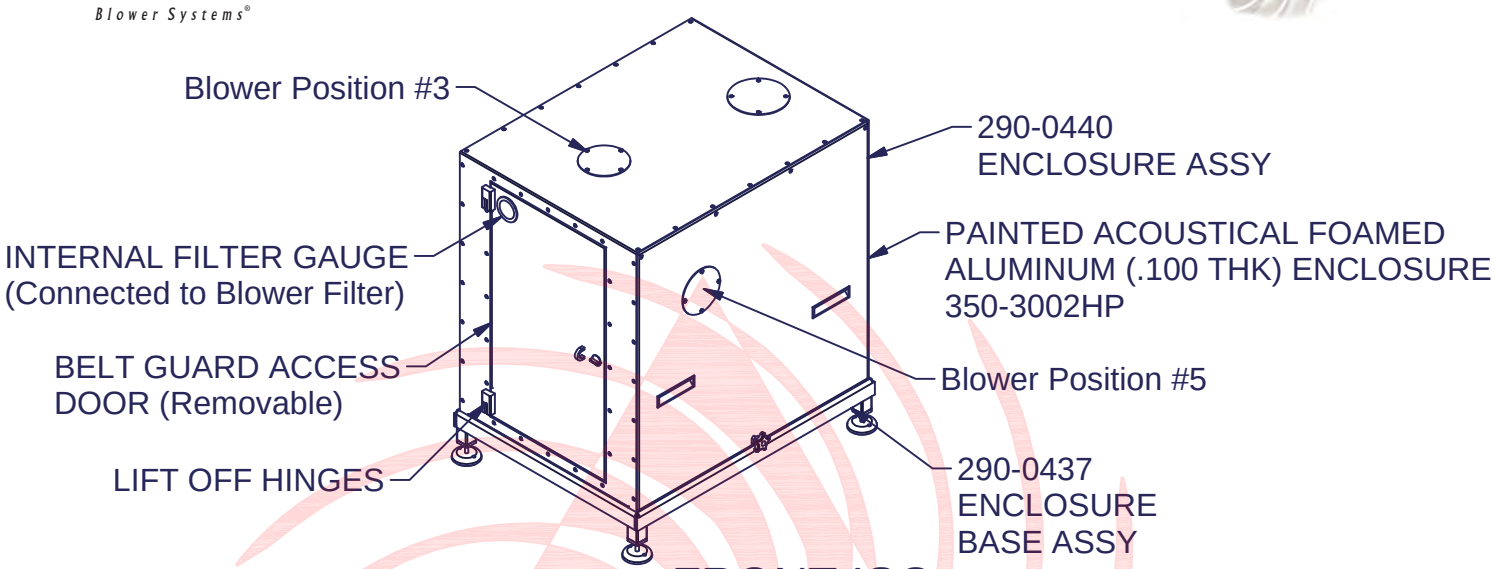

FRONT ISO

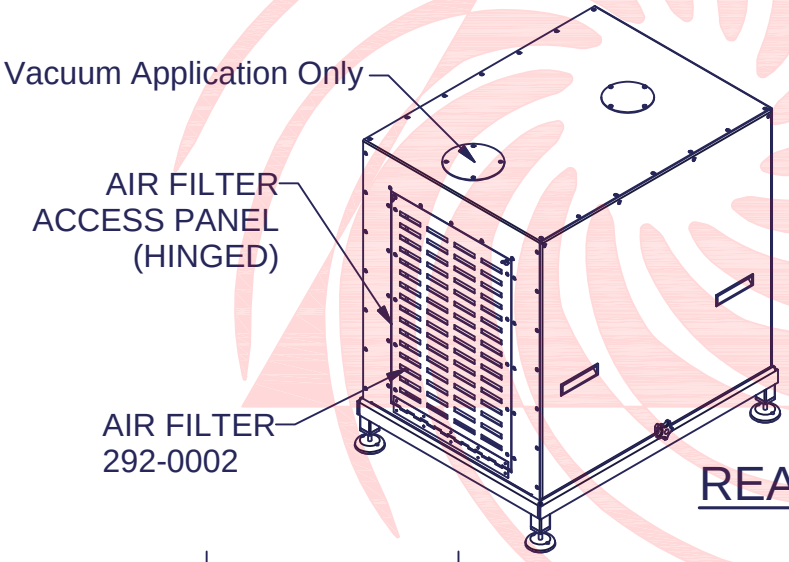

REAR ISO

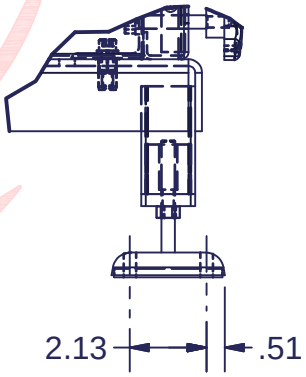

DETAIL A

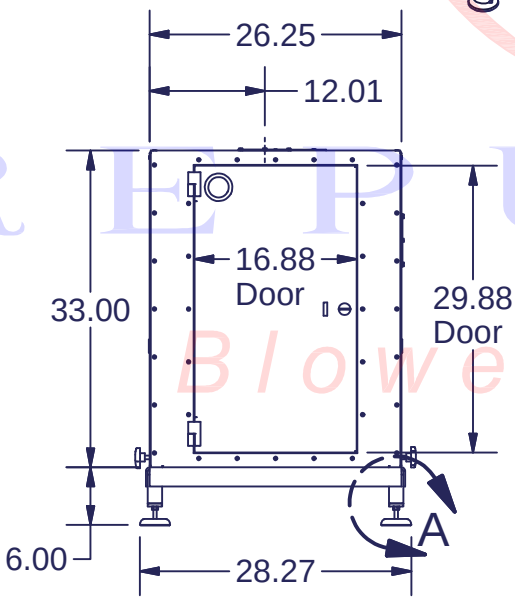

FRONT VIEW

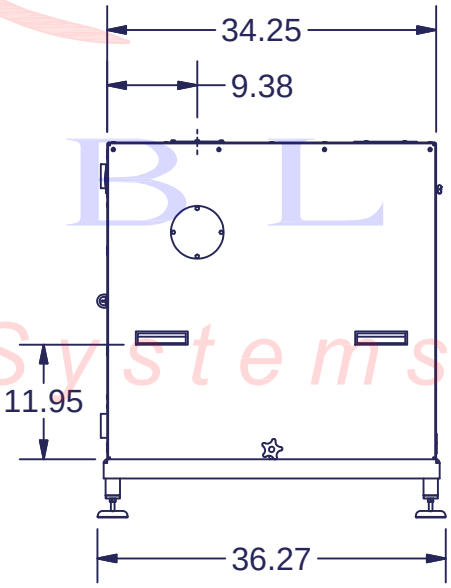

SIDE VIEW

High Profile Painted Enclosure Assembly	350-3002HP